Lil Hercules 2.0
Hose Reel Hydraulics Diagram

For Units Received:
May 2021 - Present
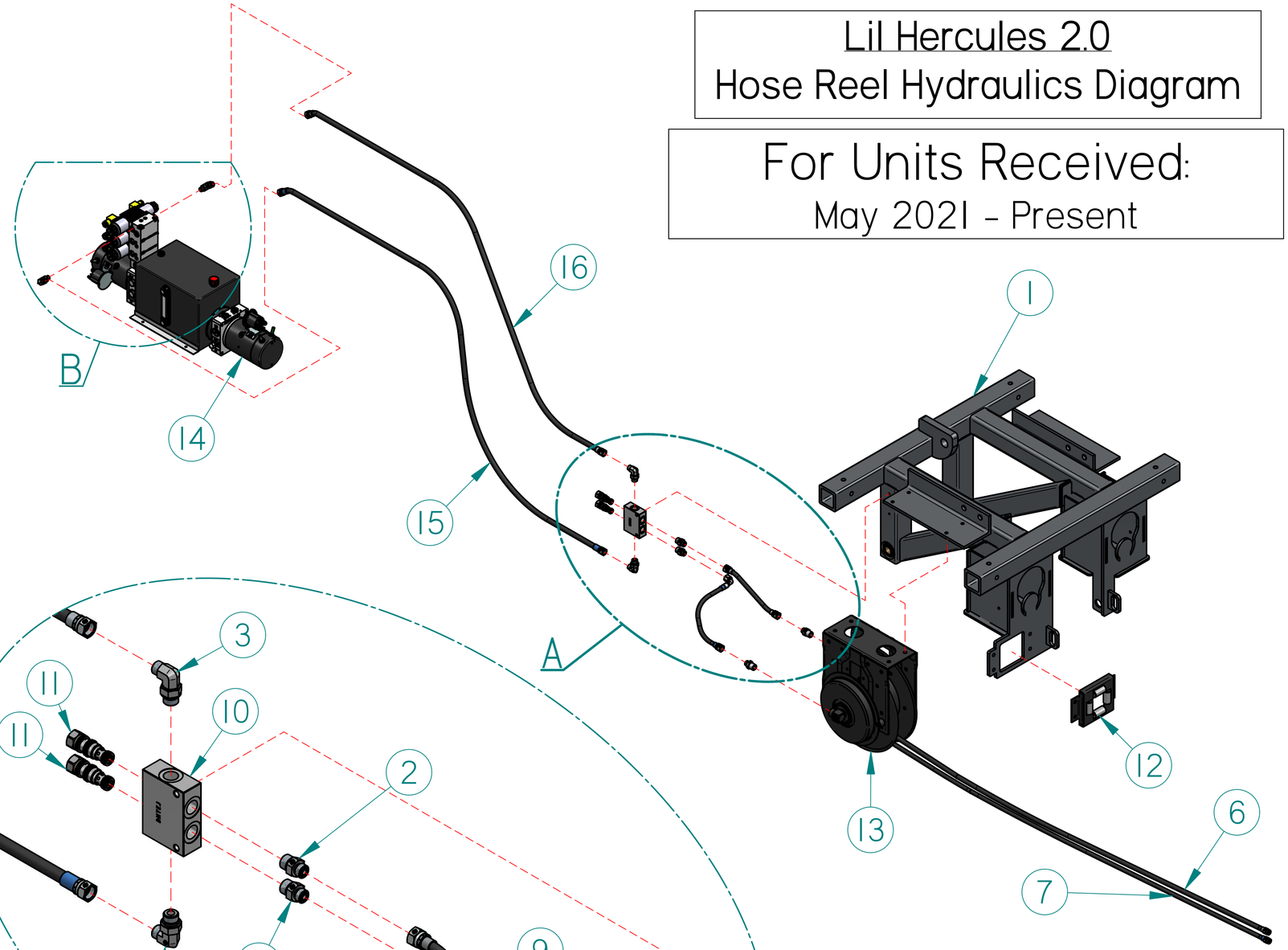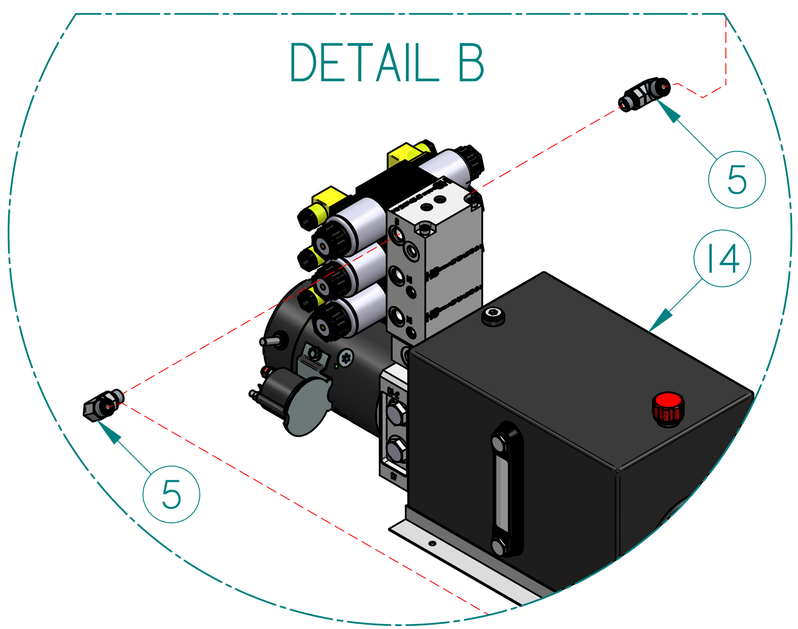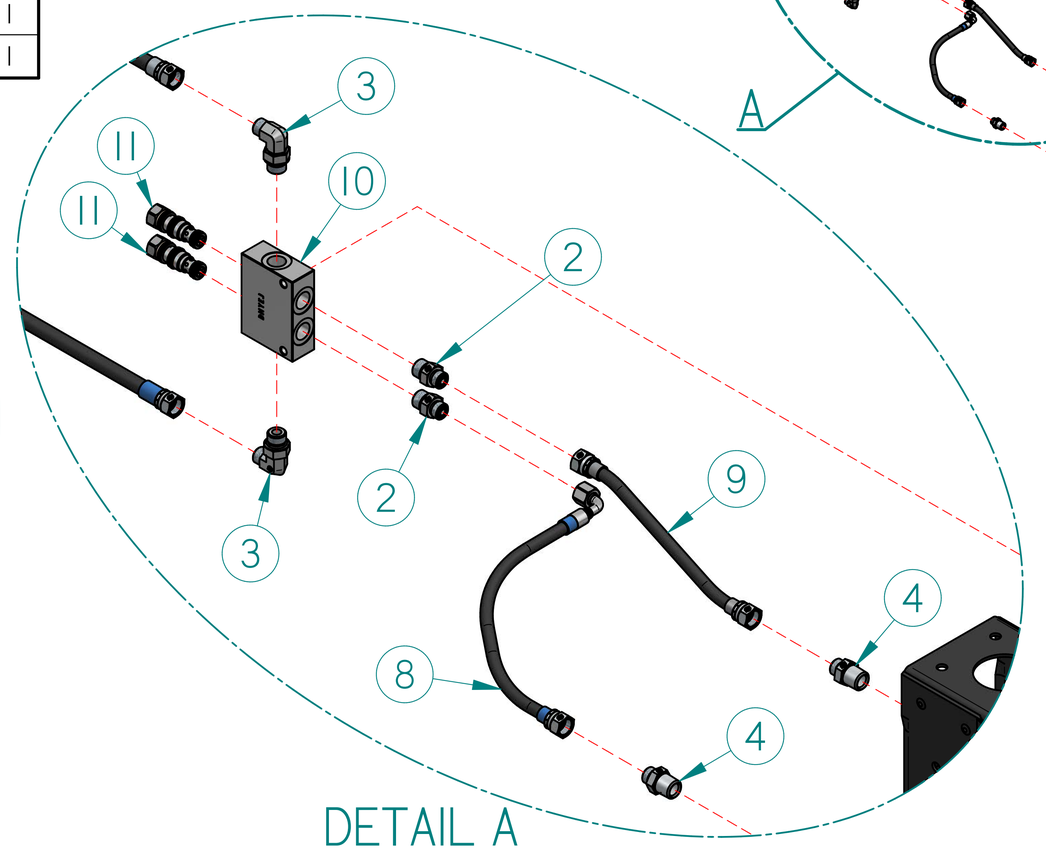
Item #	Part #:	Description	Qty
1	LH-2.0-FF-BLACK	LH-2.0-Frame-Black	1
2	15570	FITTING-Check Block Straight Fitting	2
3	15595	FITTING-Check Block 90deg Fitting	2
4	7334	FITTING-Hose Reel Fittings	2
5	15741	FITTING-Pump Fitting	2
6	17355	LH-HOSE-Gray 80"	1
7	17353	LH-HOSE-Blue 80"	1
8	17350	LH-HOSE-Blue 16"	1
9	17356	LH-HOSE-Gray 8.5"	1
10	15017	LH-Dual Acting Check block	1
11	14900	LH-Check Block Cartidge	2
12	8001	Hannay Hose Roller Guide	1
13	8000	Hannay Hose Reel	1
14	17620	LH-2.0-Dual Motor 6 Function Pump	1
15	144" BLUE - LH Hose	LH-HOSE-Blue 144"	1
16	150" GRAY - LH Hose	LH-HOSE-Gray 150"	1